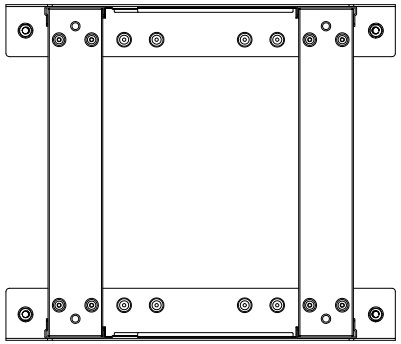

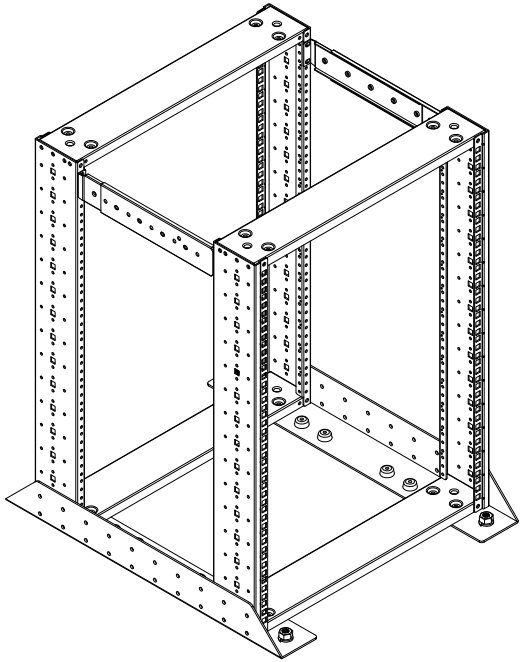

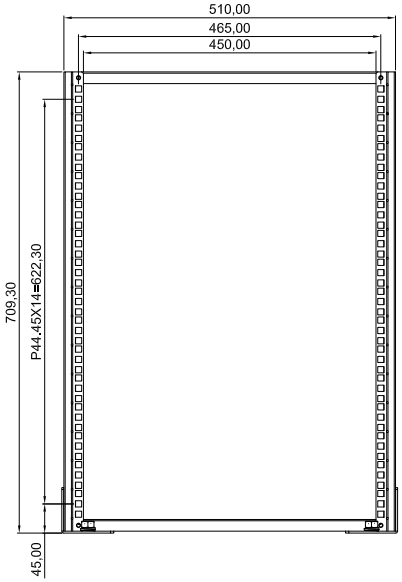


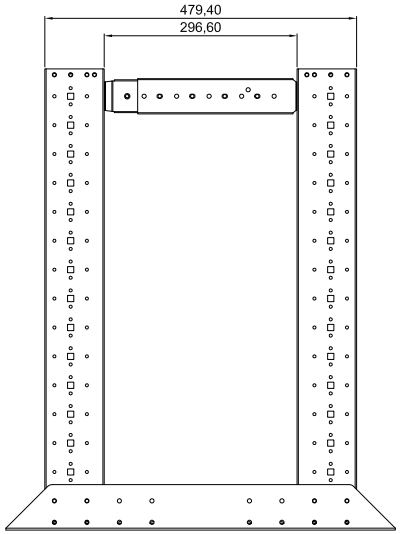


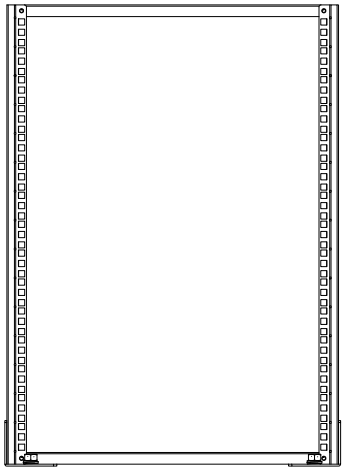

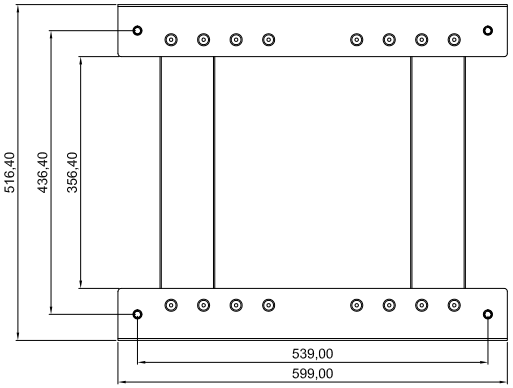


# Part# AR3007

Synergy Global Technology Inc
www. RackmountMart.com